• KAPAĞA MONTE ÇİFT AÇILIM GİZLİ RAYLI TEPSİLİ TABAKLIK - BARDAKLIK MONTAJ ŞEMASI
• PLATE - GLASS SHELF WITH TRAY, MOUNTED TO LID AND FULL EXTENSION UNDERMOUNT RAIL MOUNTING INSTRUCTIONS

STARAX

A-1

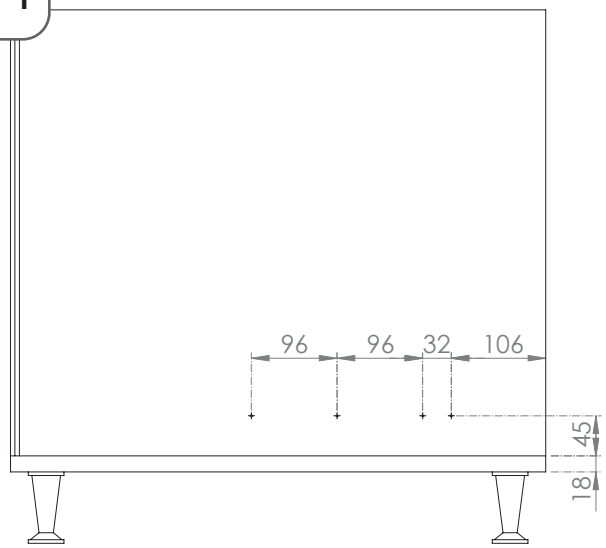

A-2

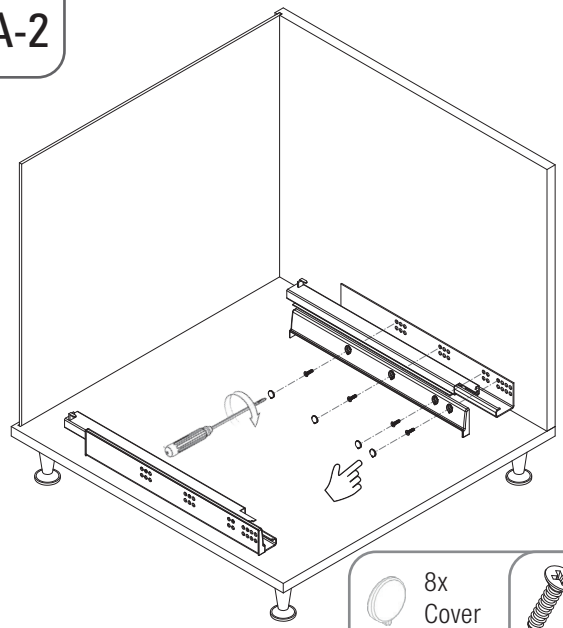

8x Cover

8x 4x16

B-1

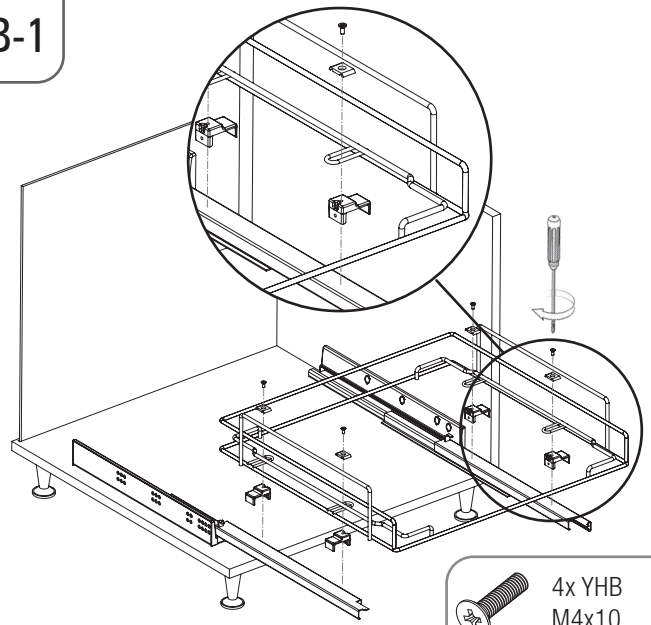

4x YHB M4x10

C-1

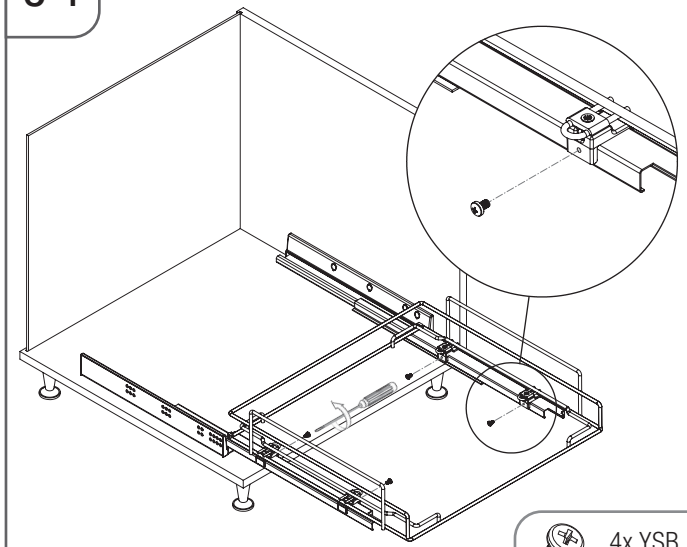

4x YSB M4x6

D-1

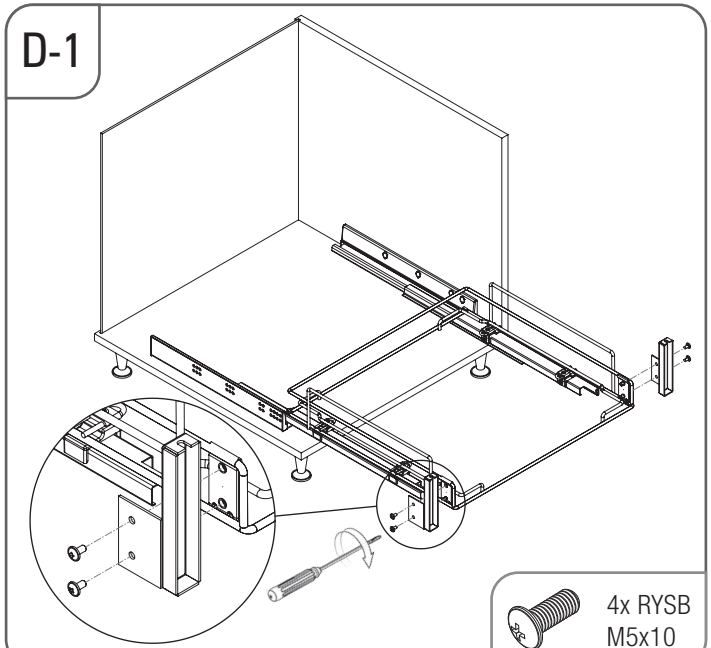

4x RYSB M5x10

E-1

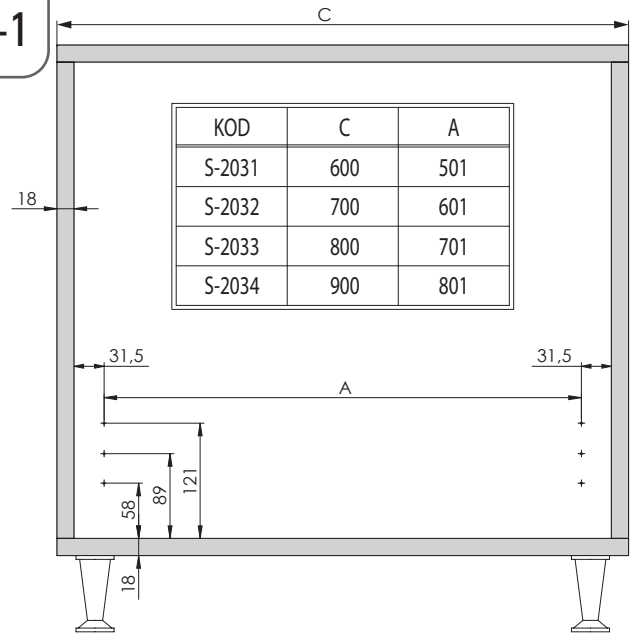

KOD	C	A
S-2031	600	501
S-2032	700	601
S-2033	800	701
S-2034	900	801

STARAX

E-2

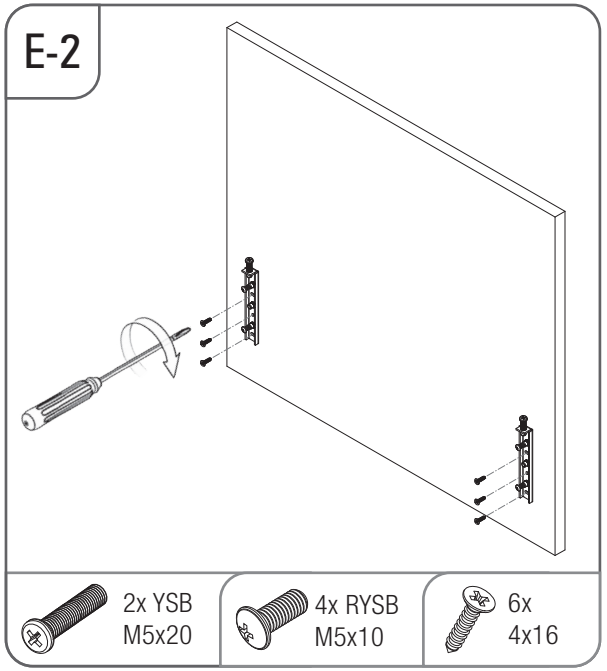

E-3

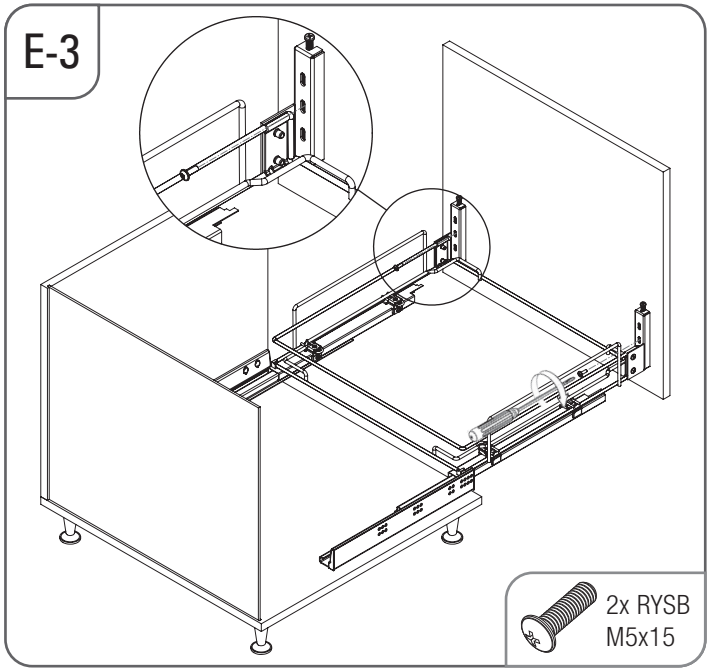

F-1

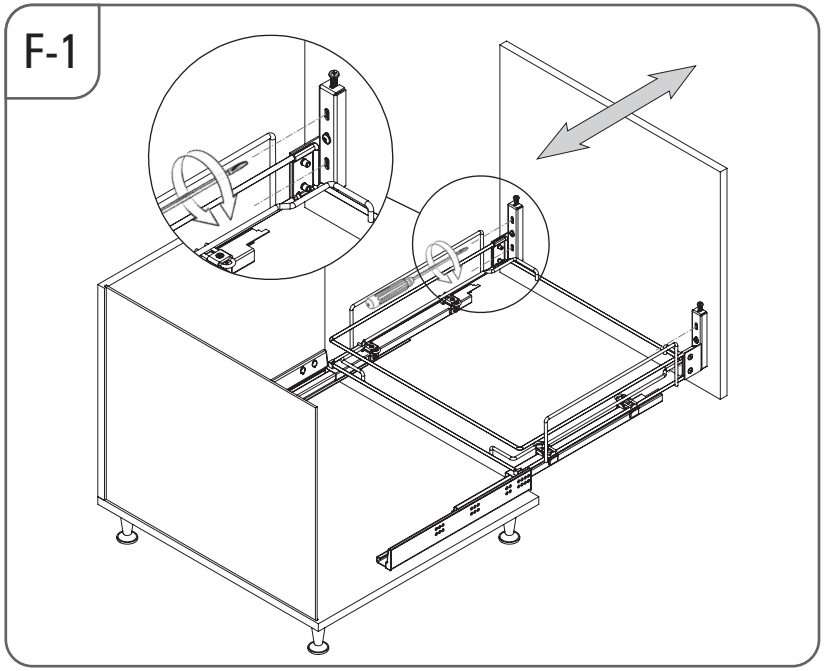

G-1

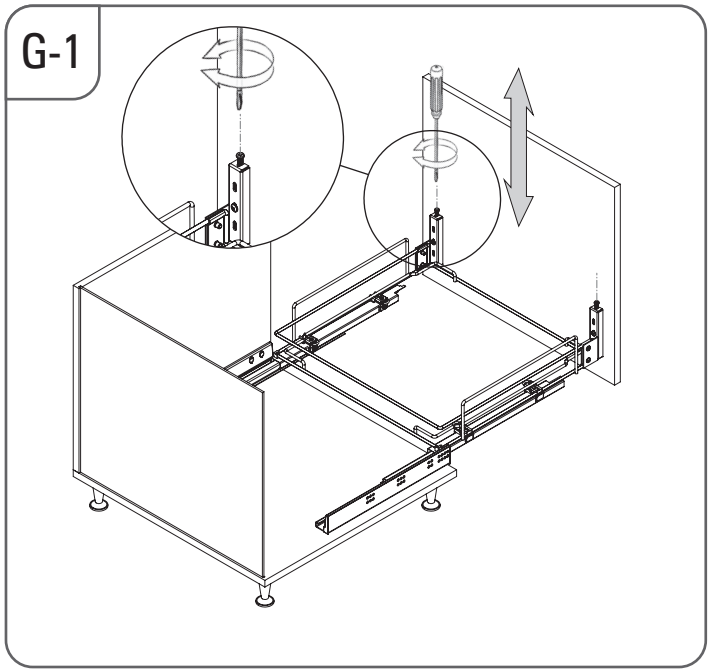

H-1

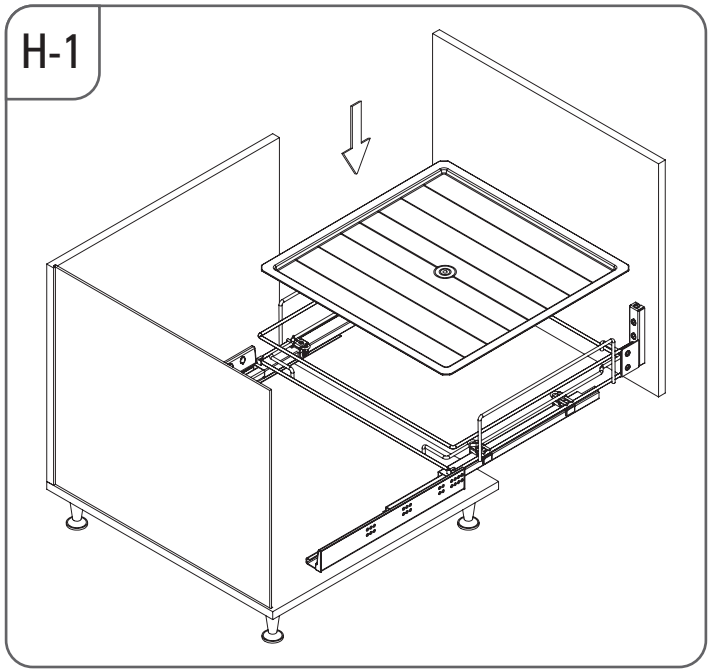
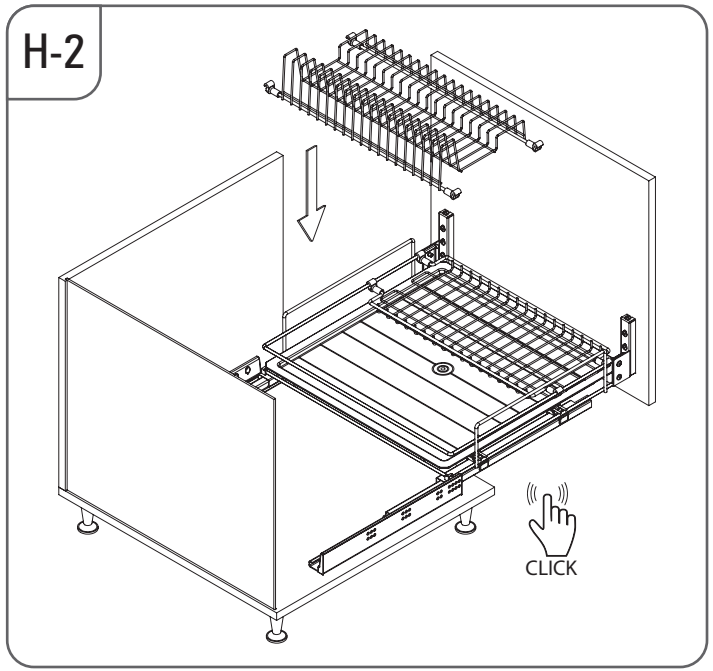
H-2